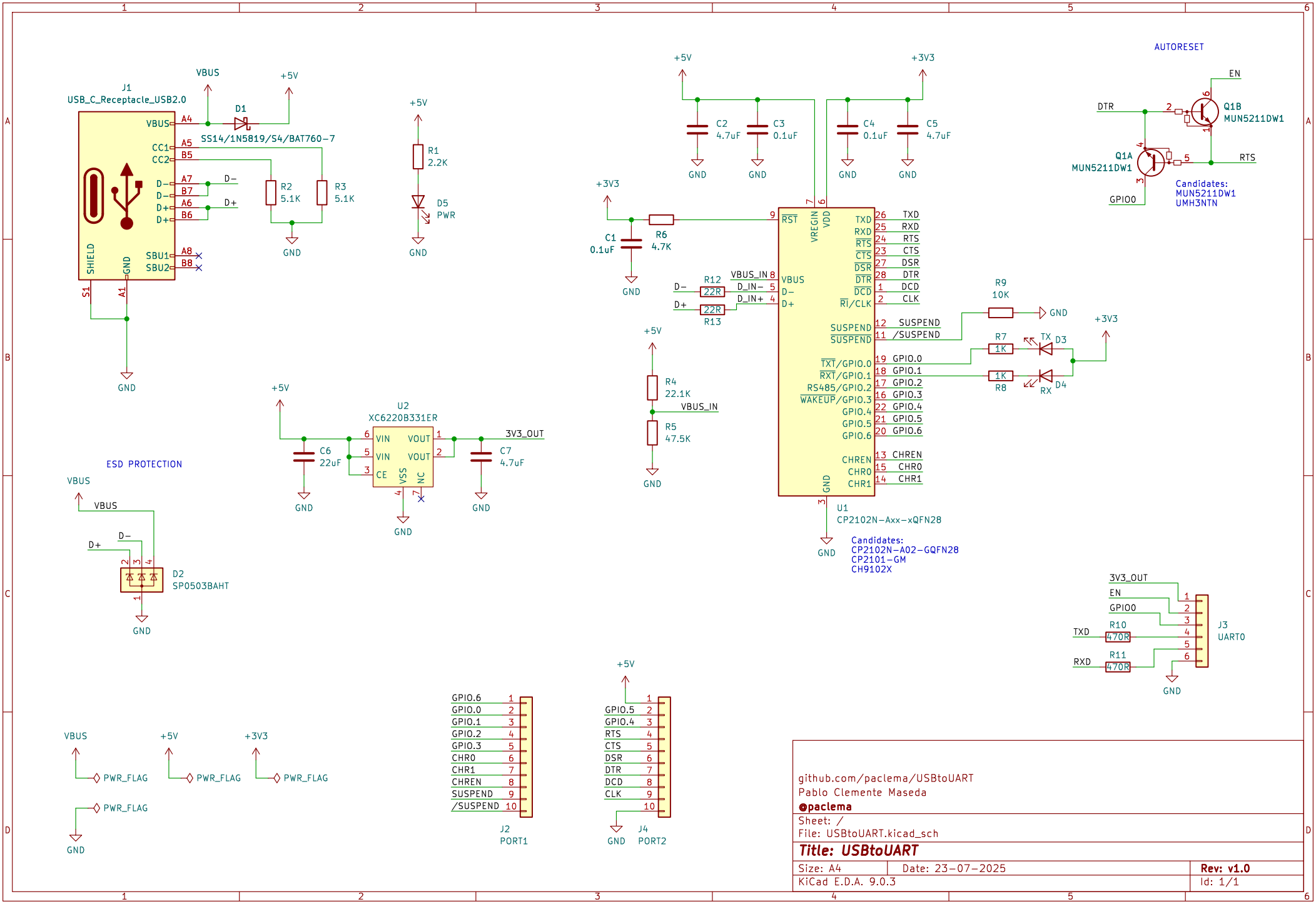
J1
USB_C_Receptacle_USB2.0
VBUS
A4
CC1
A5
CC2
B5
D−
A7
B7
D+
A6
B6
SBU1
A8
SBU2
B8
SHIELD
GND
S1
A1
D1
SS14/1N5819/S4/BAT760−7
+5V
R2
5.1K
R3
5.1K
GND
R1
2.2K
D5
PWR
C2
4.7uF
C3
0.1uF
C4
0.1uF
C5
4.7uF
+3V3
C1
0.1uF
R6
4.7K
RST
VREGIN
VDD
VBUS
D−
D+
R12
22R
R13
22R
VBUS_IN
D_IN−
D_IN+
TXD
RXD
RTS
CTS
DSR
DTR
DCD
RI/CLK
SUSPEND
/SUSPEND
TXT/GPIO.0
RXT/GPIO.1
RS485/GPIO.2
WAKEUP/GPIO.3
GPIO.4
GPIO.5
GPIO.6
CHREN
CHR0
CHR1
U1
CP2102N−Axx−xQFN28
Candidates:
CP2102N−A02−GQFN28
CP2101−GM
CH9102X
R9
10K
R7
1K
R8
1K
TX
RX
D3
D4
R4
22.1K
R5
47.5K
AUTORESET
EN
DTR
RTS
Q1A
MUN5211DW1
Q1B
MUN5211DW1
GPIO0
Candidates:
MUN5211DW1
UMH3NTN
U2
XC6220B331ER
VIN
VIN
CE
VOUT
VOUT
VSS
NC
C6
22uF
C7
4.7uF
3V3_OUT
ESD PROTECTION
D2
SP0503BAHT
J3
UART0
TXD
RXD
R10
470R
R11
470R
J2
PORT1
GPIO.6
GPIO.0
GPIO.1
GPIO.2
GPIO.3
CHR0
CHR1
CHREN
SUSPEND
/SUSPEND
J4
PORT2
GPIO.5
GPIO.4
RTS
CTS
DSR
DTR
DCD
CLK
PWR_FLAG
github.com/paclema/USBtoUART
Pablo Clemente Maseda
@paclema
Sheet: /
File: USBtoUART.kicad_sch
Title: USBtoUART
Size: A4
Date: 23−07−2025
Rev: v1.0
KiCad E.D.A. 9.0.3
Id: 1/1